SC.GLS.31

GLIDER / TAKE-OFF / LOOPY / JET

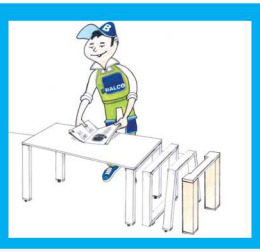

21 HPL

GH18
3 x M
5 x Z
2 x W

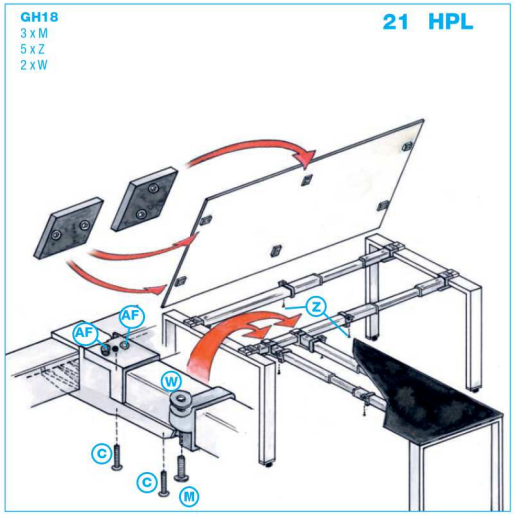

22/1

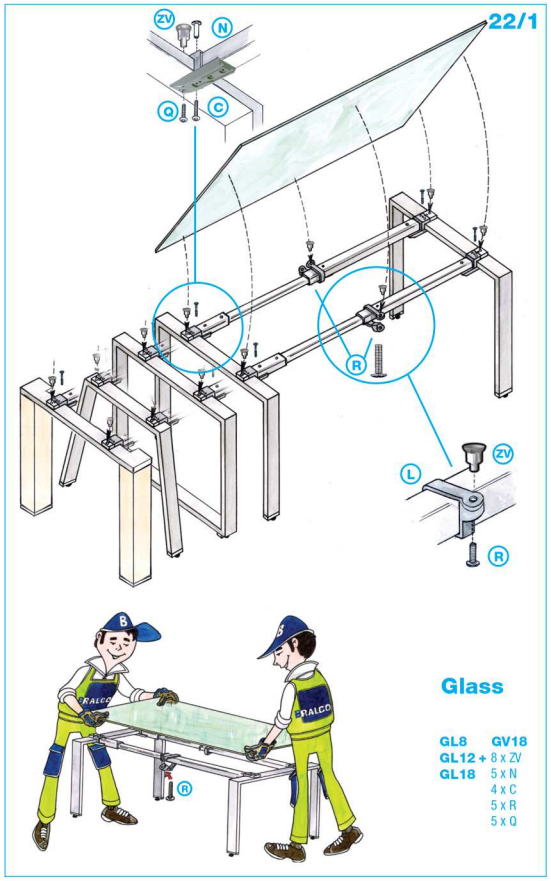

Glass

GL8	GV18
GL12 +	8 x ZV
GL18	5 x N
	4 x C
	5 x R
	5 x Q

25

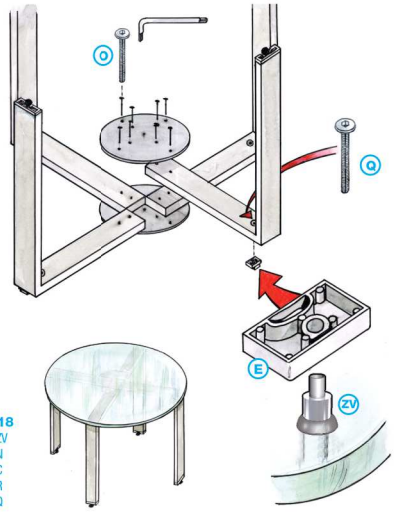

GL04 +	GV18
4 x E	8 x ZV
9 x O	5 x N
1 x G	4 x C
	5 x R
	5 x Q

24

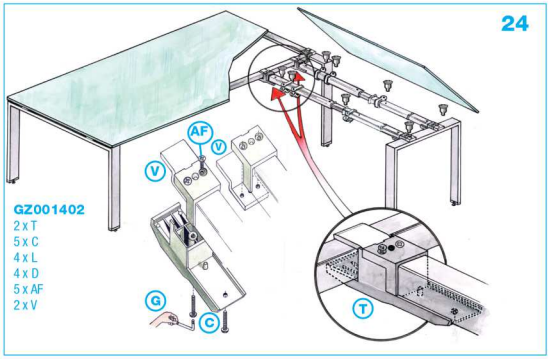

GZ001402
2 x T
5 x C
4 x L
4 x D
5 x AF
2 x V

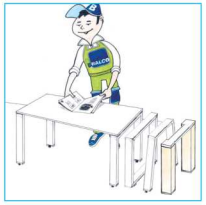

1

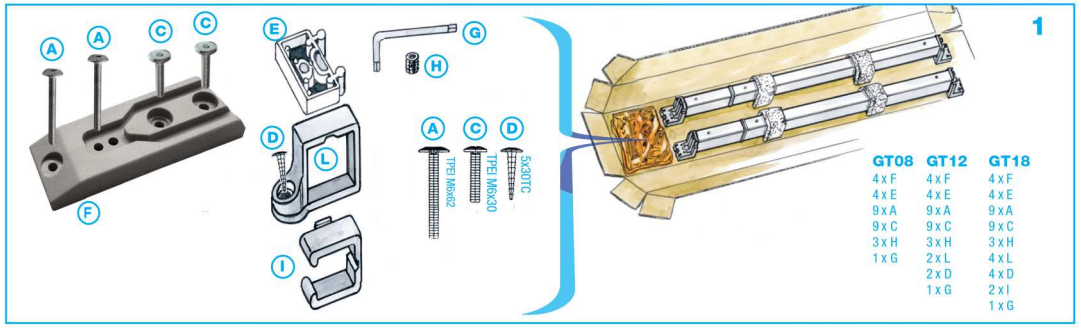

GT08	GT12	GT18
4 x F	4 x F	4 x F
4 x E	4 x E	4 x E
9 x A	9 x A	9 x A
9 x C	9 x C	9 x C
3 x H	3 x H	3 x H
1 x G	2 x L	4 x L
	2 x D	4 x D
	1 x G	2 x I
		1 x G

2

3

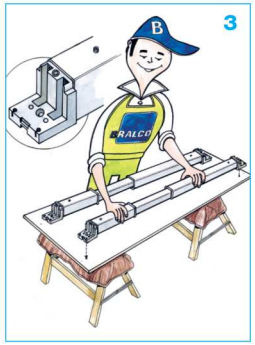

4

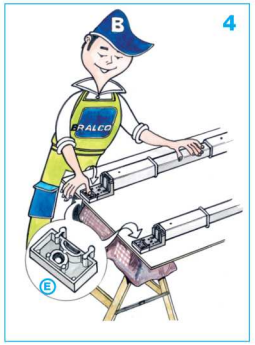

5

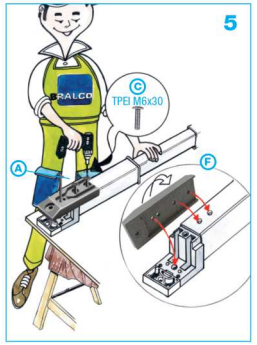

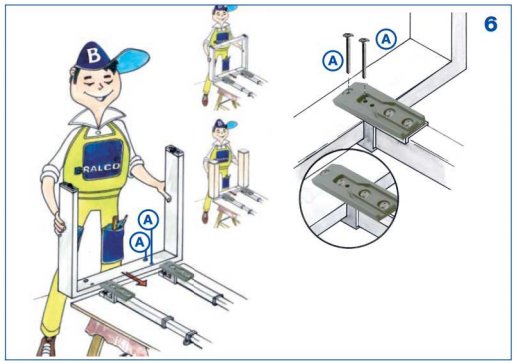
6
A
A
A

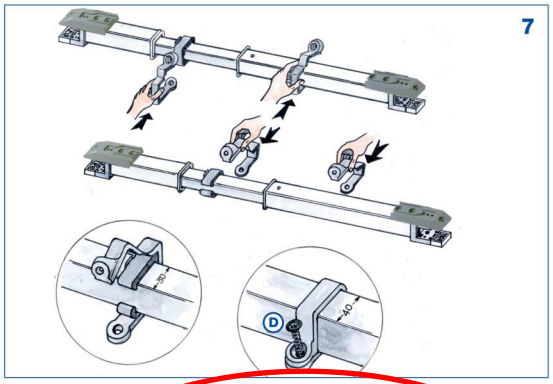
7
D
40

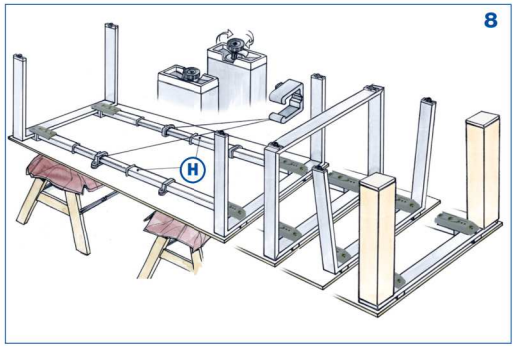
8
H

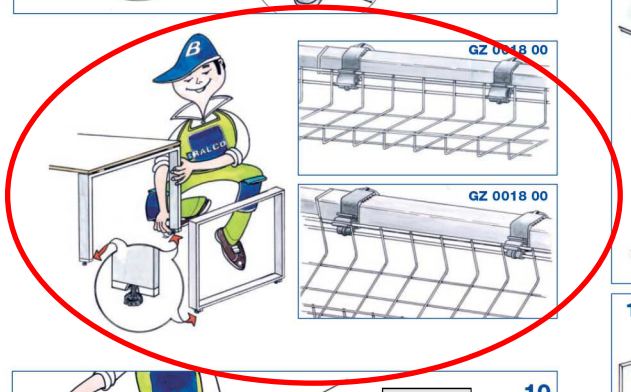
GZ 0018 00
GZ 0018 00

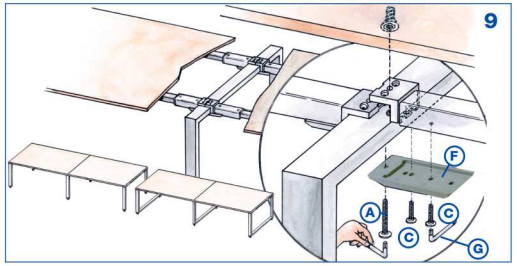
9
F
A
C
C
G

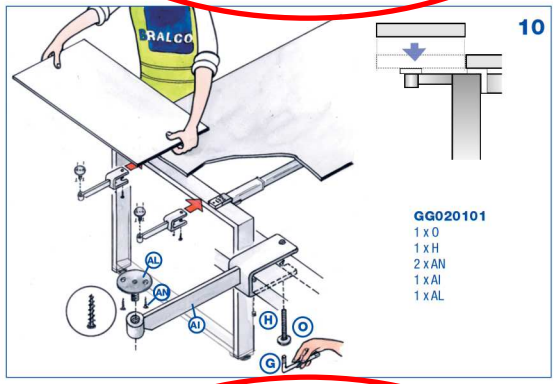
10
GG020101
1 x O
1 x H
2 x AN
1 x AI
1 x AL
AL
AN
AI
H
O
G

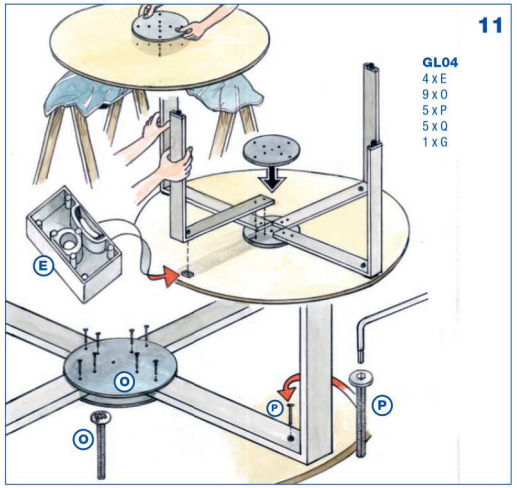
11
GL04
4 x E
9 x O
5 x P
5 x Q
1 x G
E
O
P
P
O

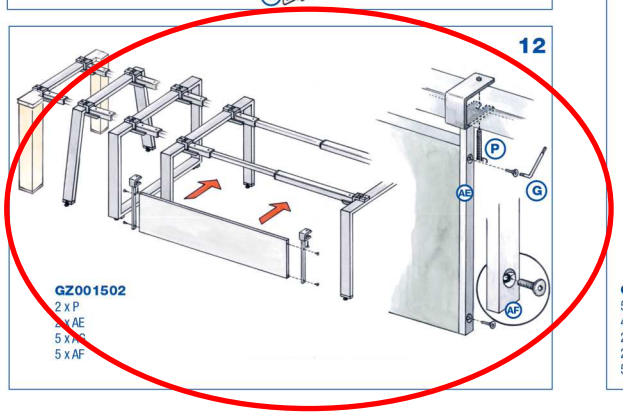
12
GZ001502
2 x P
2 x AE
5 x AC
5 x AF
P
G
AE
AF

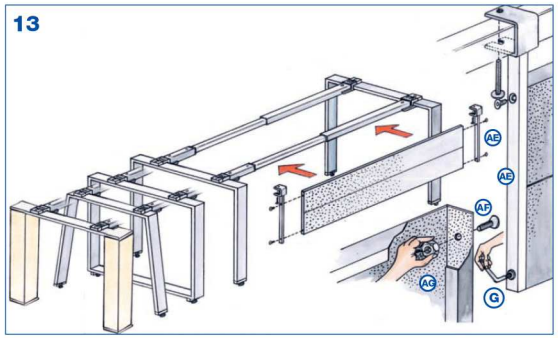
13
AE
AE
AF
AC
G

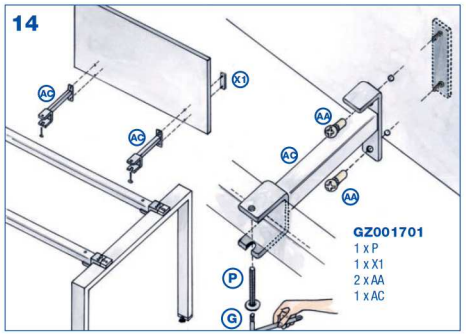
14
X1
AC
AC
AA
AC
AA
GZ001701
1 x P
1 x X1
2 x AA
1 x AC
P
G

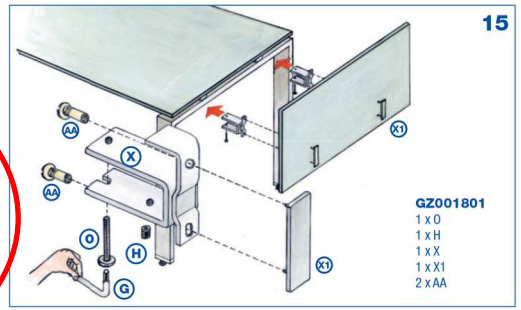
15
AA
X
AA
X1
O
H
X1
G
GZ001801
1 x O
1 x H
1 x X
1 x X1
2 x AA

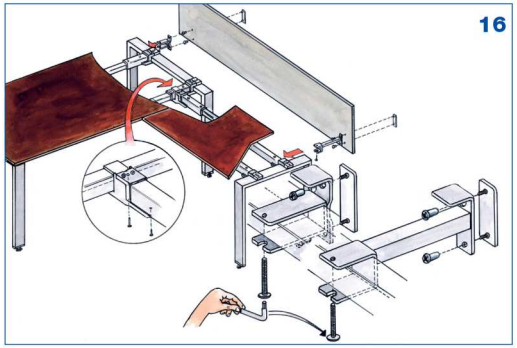
16

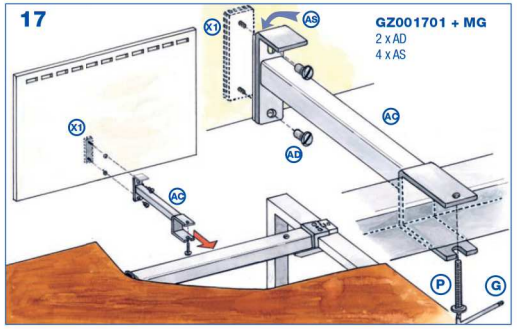
17
X1
AS
GZ001701 + MG
2 x AD
4 x AS
X1
AC
AC
AD
P
G

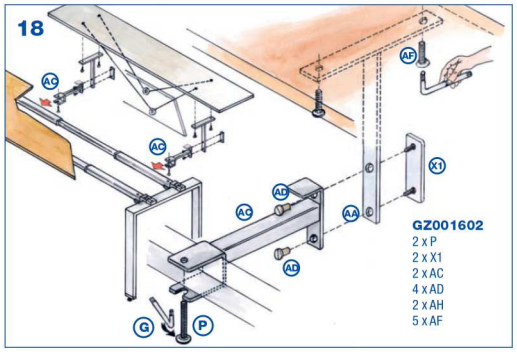
18
AC
AF
AC
X1
AC
AD
AA
AD
GZ001602
2 x P
2 x X1
2 x AC
4 x AD
2 x AH
5 x AF
G
P

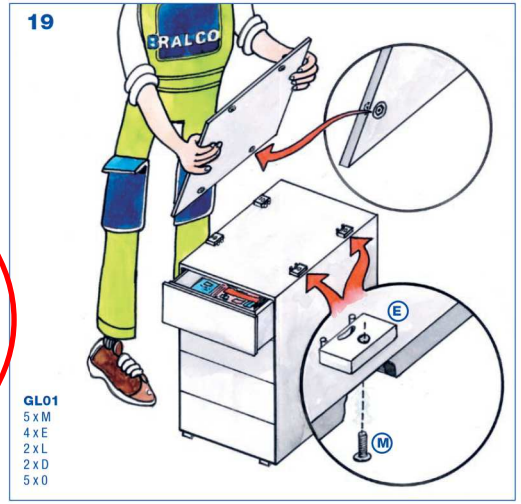
19
E
M
GL01
5 x M
4 x E
2 x L
2 x D
5 x O

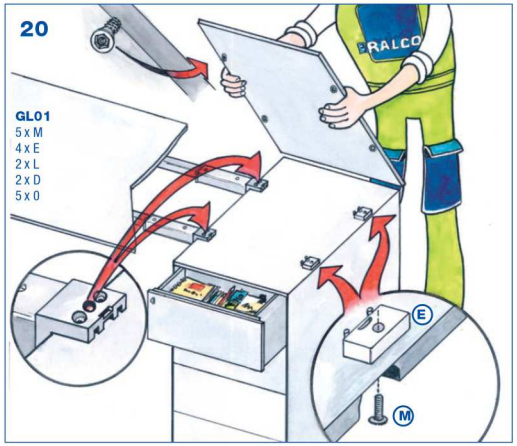
20
GL01
5 x M
4 x E
2 x L
2 x D
5 x O
E
M